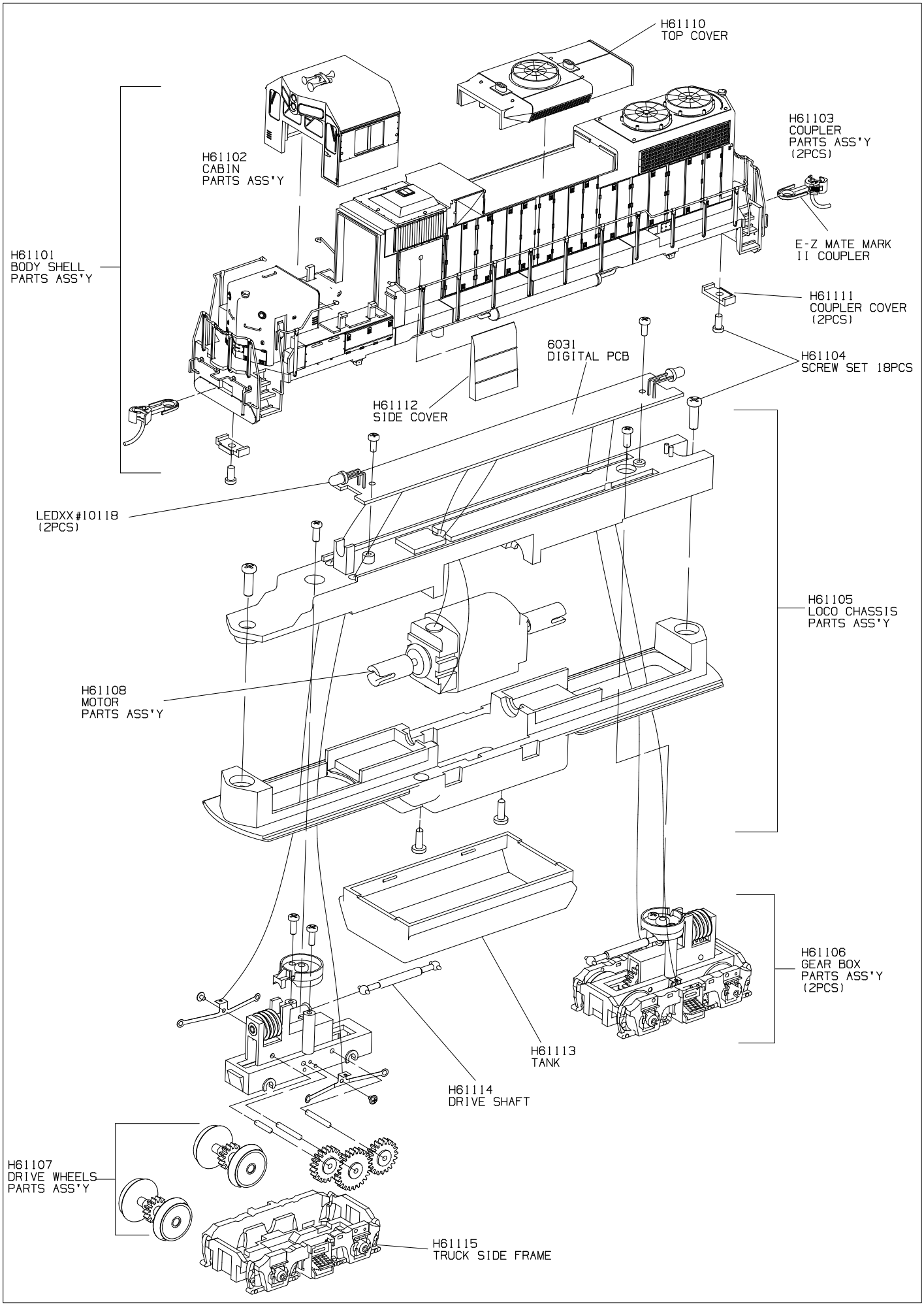
H61110
TOP COVER
H61103
COUPLER
PARTS ASS'Y
(2PCS)
H61102
CABIN
PARTS ASS'Y
E-Z MATE MARK
II COUPLER
H61101
BODY SHELL
PARTS ASS'Y
H61111
COUPLER COVER
(2PCS)
6031
DIGITAL PCB
H61104
SCREW SET 18PCS
H61112
SIDE COVER
LEDXX#10118
(2PCS)
H61105
LOCO CHASSIS
PARTS ASS'Y
H61108
MOTOR
PARTS ASS'Y
H61106
GEAR BOX
PARTS ASS'Y
(2PCS)
H61113
TANK
H61114
DRIVE SHAFT
H61107
DRIVE WHEELS
PARTS ASS'Y
H61115
TRUCK SIDE FRAME

H611X-IS001