2-8-0 FREIGHT LOCOMOTIVE AND TENDER 3-RAIL

No. 3225 ORIGINAL TYPE WITH ½" MOTOR AND No. 3224 MODIFIED TYPE WITH ⅝" MOTOR

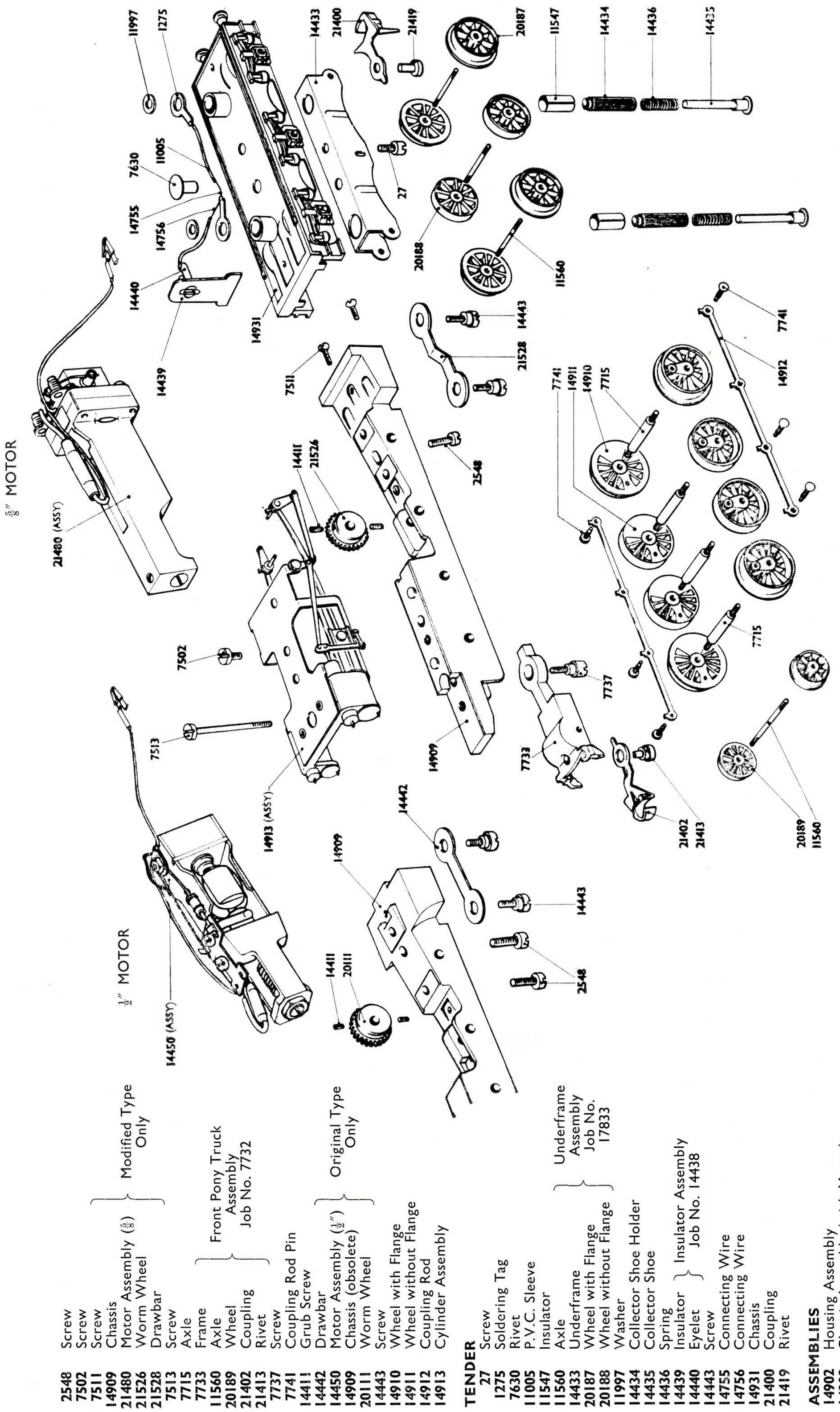

2548	Screw	
7502	Screw	
7511	Screw	
14909	Chassis	
21480	Motor Assembly (⅝)	Modified Type Only
21526	Worm Wheel	
21528	Drawbar	
7513	Screw	
7715	Axle	
7733	Frame	Front Pony Truck Assembly Job No. 7732
11560	Axle	
20189	Wheel	
21402	Coupling	
21413	Rivet	
7737	Screw	
7741	Coupling Rod Pin	
14411	Grub Screw	
14442	Drawbar	
14450	Motor Assembly (½")	Original Type Only
14909	Chassis (obsolete)	
20111	Worm Wheel	
14443	Screw	
14910	Wheel with Flange	
14911	Wheel without Flange	
14912	Coupling Rod	
14913	Cylinder Assembly	

TENDER

27	Screw	
1275	Soldering Tag	
7630	Rivet	
11005	P.V.C. Sleeve	
11547	Insulator	
11560	Axle	Underframe Assembly Job No. 17833
14433	Underframe	
20187	Wheel with Flange	
20188	Wheel without Flange	
11997	Washer	
14434	Collector Shoe Holder	
14435	Collector Shoe	
14436	Spring	
14439	Insulator	Insulator Assembly Job No. 14438
14440	Eyelet	
14443	Screw	
14755	Connecting Wire	
14756	Connecting Wire	
14931	Chassis	
21400	Coupling	
21419	Rivet	

ASSEMBLIES

14902	Housing Assembly
14908	Chassis Assembly (with Motor)
18669	Chassis Assembly (without Motor)