No. 50 CLOCKWORK LOCOMOTIVE

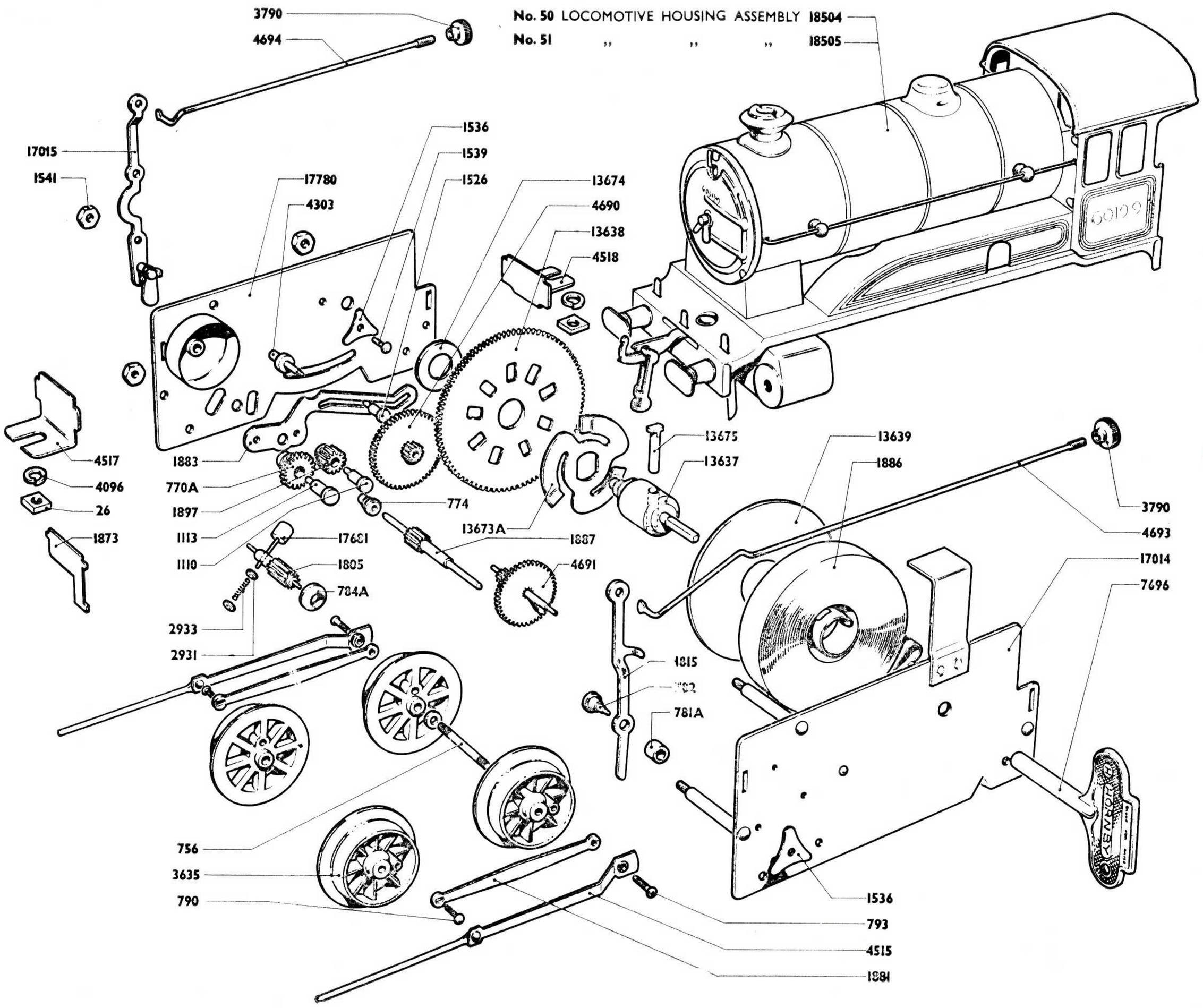

26	Nut	
756	Axle	
770A	No. 4 Gear Wheel	R.H. Sideplate Assembly Job No. 4676
774	Bush	
1110	Bearing (For Reversing Pinion)	
1113	Bearing (For No. 4 Gear Wheel)	
1526	Stud	
1536	Spring Washer	
1539	Stud	
1883	Reversing Lever	
1897	Reversing Pinion	
4303	Stud for No. 2 Gear	
17015	Control Lever Assembly	
17780	R.H. Sideplate Sub-Assembly	
781A	Brake Lever Collar	L.H. Sideplate Assembly Job No. 4675
782	Stud	
1536	Spring Washer	
1815	Brake Lever	
17014	L.H. Sideplate Sub-Assembly	
784A	Brake Disc	Governor Assembly Job No. 4692
1805	Governor Pinion	
2931	Washer	
2933	Spring	
17681	Pin & Weight Assembly	
790	Pin (Coupling Rod)	
793	Pin (Connecting Rod)	

1541	Nut	
1873	Brake Controller	
1881	Coupling Rod	
1886	Mainspring	
1887	Driving Shaft	
3635	Wheel	
3790	Nut	
4096	Spring Washer	
4515	Piston & Connecting Rod Assembly	
4517	Front Fixing Bracket	
4518	Rear Fixing Bracket	
4690	No. 2 Gear & Pinion Assembly	
4691	No. 3 Gear & Pinion Assembly	
4693	Brake Lever Rod	
4694	Reversing Lever Rod	
7696	Winding Key "H" Key—Sales No. 43902	
13637	Winding Shaft	No. 1 Gear Assembly Job No. 13636
13638	No. 1 Gear	
13673A	Ratchet	
13674	Washer	
13675	Mainspring Pin	
13639	Mainspring Guard	

ASSEMBLIES

4519	No. 50 Motor—Complete
18504	Housing Assembly—No. 50 Locomotive
18505	Housing Assembly—No. 51 Locomotive

MECCANO LTD · BINNS ROAD · LIVERPOOL

72871/02

Printed in England