Hornby Railways

See overleaf for list of spare parts

4-6-0 LOCOMOTIVE CHASSIS- R.061, "Black Five"
as produced from January 1976

Most parts also applicable to R.859.

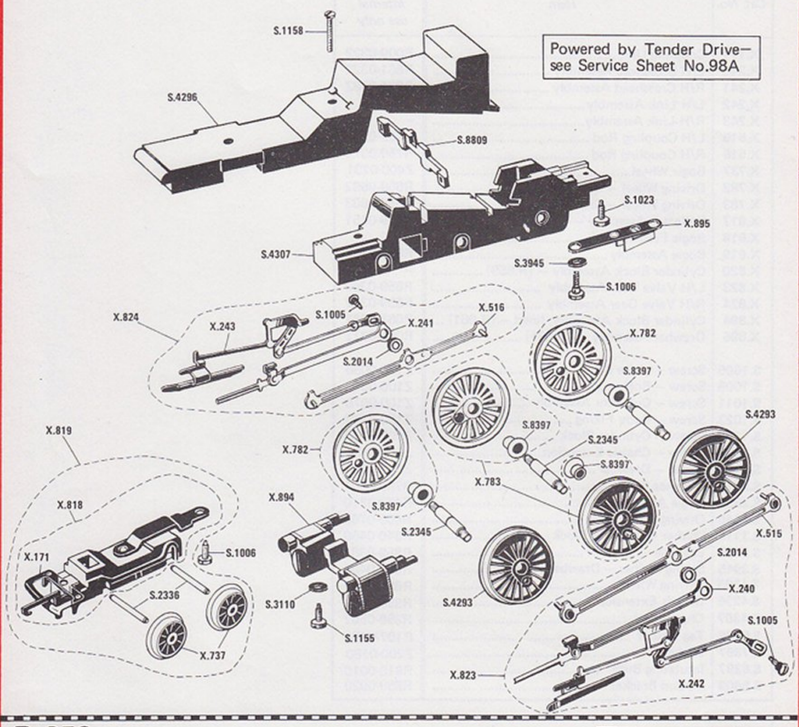

R.859

Other parts as for R.061 above.

On R.859 the Insulated Driving Wheels, X.782, are on the opposite side to R.061 illustrated above.

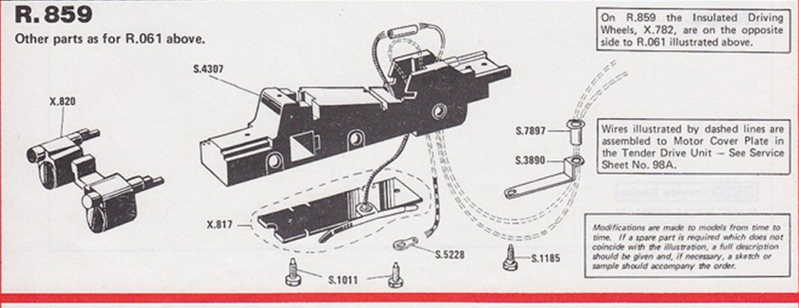

Wires illustrated by dashed lines are assembled to Motor Cover Plate in the Tender Drive Unit – See Service Sheet No. 98A.

Modifications are made to models from time to time. If a spare part is required which does not coincide with the illustration, a full description should be given and, if necessary, a sketch or sample should accompany the order.

Hornby Railways

List of Parts

4-6-0 LOCOMOTIVE CHASSIS- R.061, "Black Five"

Most parts also applicable to R.859.

Cat. No.	*Item*	*For Rovex internal use only*
X.171	Coupling Unit	R009-0322
X.240	L/H Crosshead Assembly	R861-0322
X.241	R/H Crosshead Assembly	R861-0382
X.242	L/H Link Assembly	–
X.243	R/H Link Assembly	–
X.515	L/H Coupling Rod	R759-0362
X.516	R/H Coupling Rod	R759-0372
X.737	Bogie Wheel	Z400-0231
X.782	Driving Wheel – Bushed	R859-0592
X.783	Driving Wheel – Cranked	R859-0603
X.817	Collector Assembly – (R.859)	R859-0751
X.818	Bogie Frame	–
X.819	Bogie Assembly	R859-0392
X.820	Cylinder Block Assembly – (R.859)	–
X.823	L/H Valve Gear Assembly	R859-0363
X.824	R/H Valve Gear Assembly	R859-0362
X.894	Cylinder Block Assembly, lined – (R.061)	R061-0061
X.895	Drawbar Assembly – (R.061)	R061-0312
S.1005	Screw – Valve Gear	Z100-0030
S.1006	Screw – Bogie	Z100-0040
S.1011	Screw – Collector Assembly	Z100-0070
S.1023	Screw – Body Fixing	Z100-0160
S.1155	Screw – Cylinder Block	Z100-0440
S.1158	Screw – Chassis Extension	Z100-0460
S.1185	Screw – Drawbar	Z100-0520
S.2014	Distance Piece	R759-0661
S.2336	Bogie Axle	R450-0810
S.2345	Driving Wheel Axle	R859-0760
S.3110	Washer – Cylinder Block	R640-0460
S.3890	Drawbar – (R.859)	R859-0381
S.3945	Spring Washer – Drawbar – (R.061)	R061-0460
S.4293	Driving Wheel	R859-0572
S.4296	Chassis Extension	R859-0581
S.4307	Chassis	R859-0562
S.5228	Tag Washer	R107-0780
S.7897	Eyelet	Z200-0180
S.8397	Insulating Bush	R910-0010
S.8809	Motion Bracket	R859-0020

Notes

ROVEX Service Centre
ALBERT STREET, RAMSGATE, KENT, CT11 9HD, ENGLAND.

A4 – Printed in England.