LOCOMOTIVE

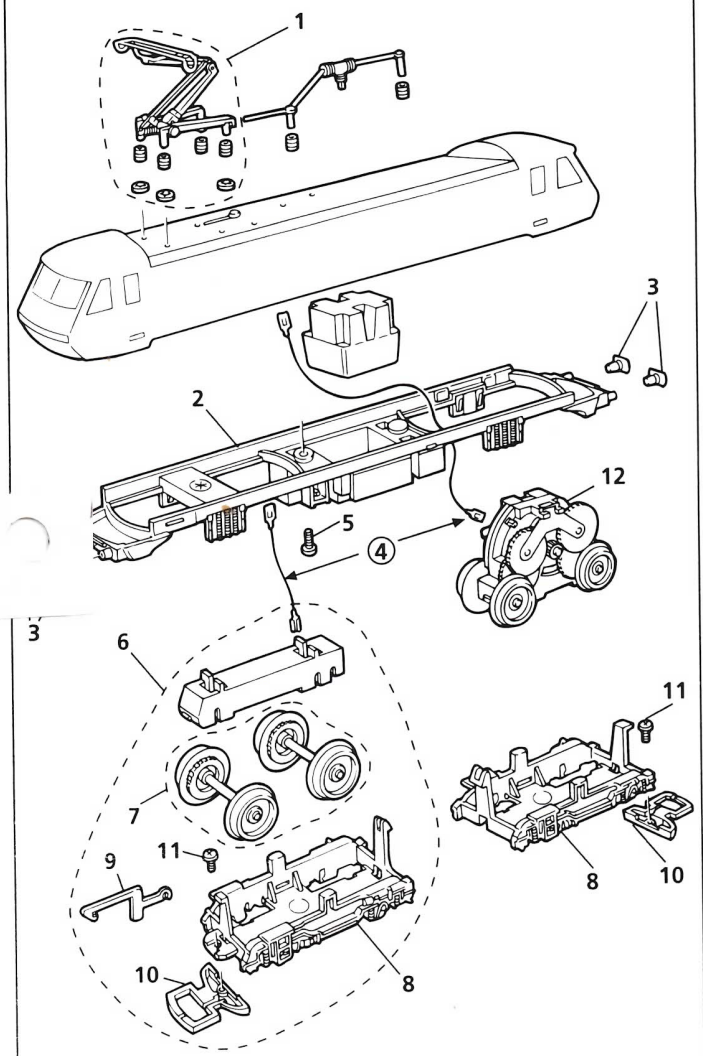

DRIVE UNIT

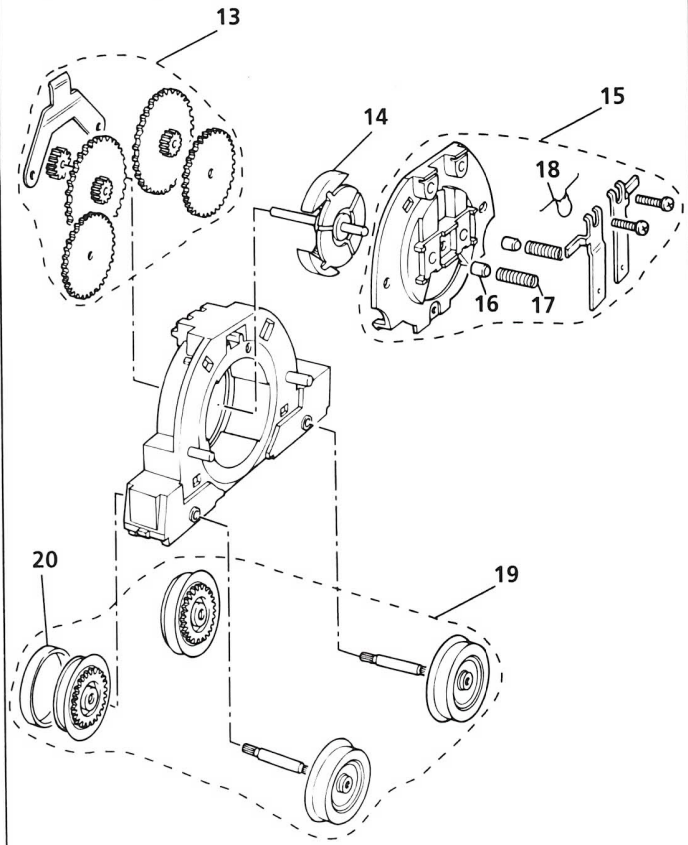

T OF SPARES

No.	Description	Pack	R2005	R2067
1	Pantograph Kit	1	X8013	X8013
2	Underframe	1	L6799	L6799
3	Buffers Straight Sided	10	X8122	X8122
4	Pantograph Leads	pair	X8278	X8278
5	Body Screw	10	X8140	X8140
6	Non-Power Bogie Complete	1	X8293	X8293
7	Non-Power Bogie Wheel / Axle Set	set	X8294	X8294
8	Bogie Frame	1	L6800	L6800
9	Coupling Hook	4	X8001	X8001
10	Coupling Bar	4	X8296	X8296
11	Coupling Screw	10	X8295	X8295
12	Drive Unit Complete	1	X2749	X2749
13	Ringfield Gear Set	set	X8193	X8193
14	Armature & Commutator	1	X803	X803
15	Ringfield Cover Plate Set	set	X6022	X6022
16	Carbon Brush	10	X8026	X8026
17	Brush Spring	10	X8027	X8027
18	Capacitor	10	X8032	X8032
19	Ringfield Wheel / Axle Set	set	X8297	X8297
20	Traction Tyre	10	X8030	X8030